Buck-Boost DC-DC Converter
(simplified switch modeling)

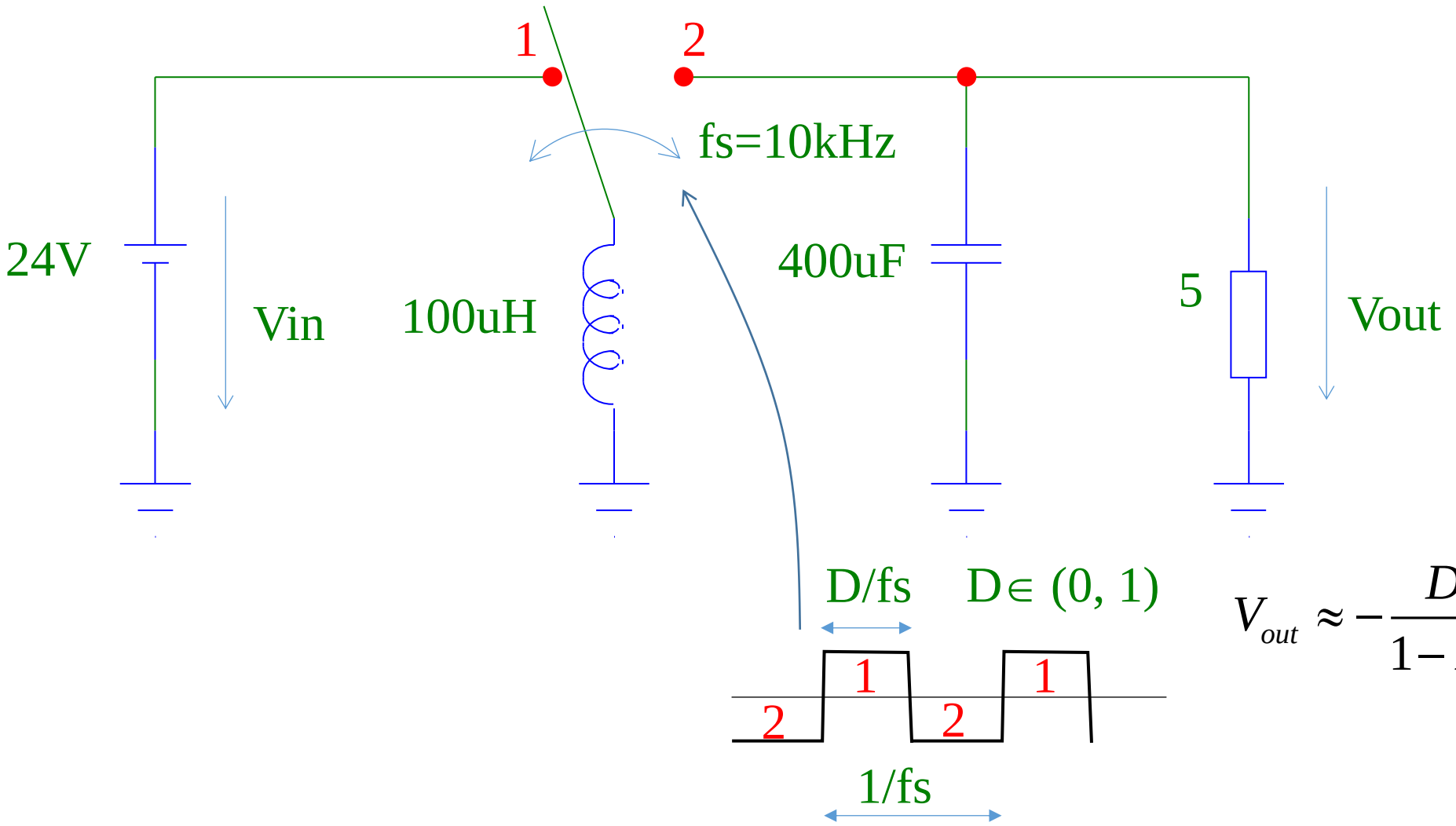

$$V_{out} \approx -\frac{D}{1-D} V_{in}$$

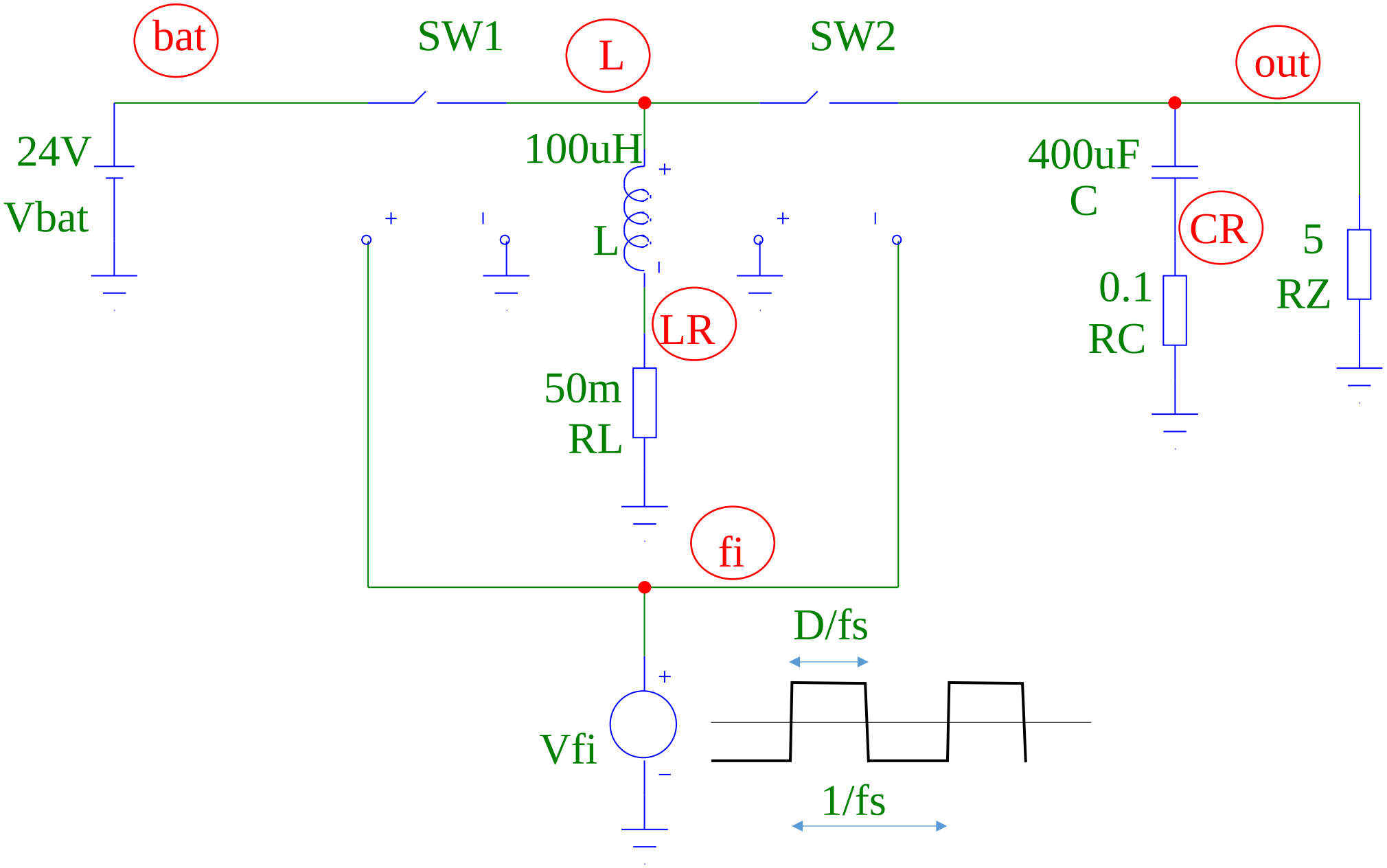
bat
SW1
L
SW2
out
24V
Vbat
100uH
L
400uF
C
CR
0.1
RC
5
RZ
LR
50m
RL
fi
Vfi
D/fs
1/fs

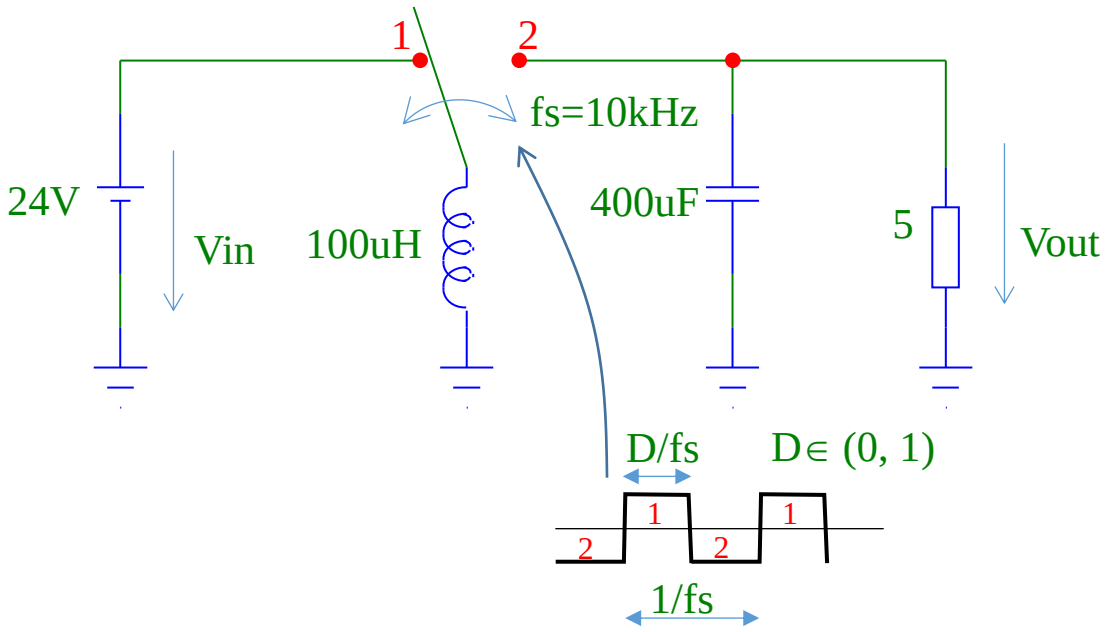
1
2
fs=10kHz
24V
Vin
100uH
400uF
5
Vout
D/fs
D∈ (0, 1)
1
1
2
2
1/fs

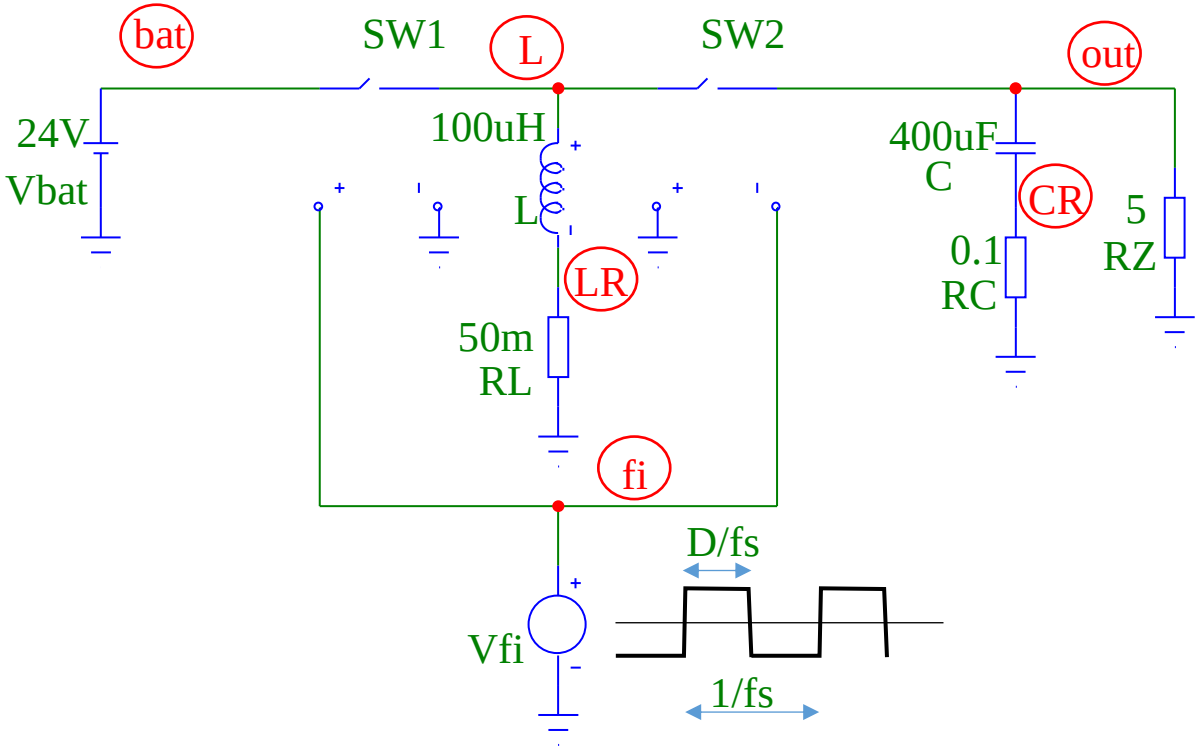
bat
SW1
L
SW2
out
24V
Vbat
100uH
L
LR
50m
RL
fi
400uF
C
CR
0.1
RC
5
RZ
Vfi
D/fs
1/fs

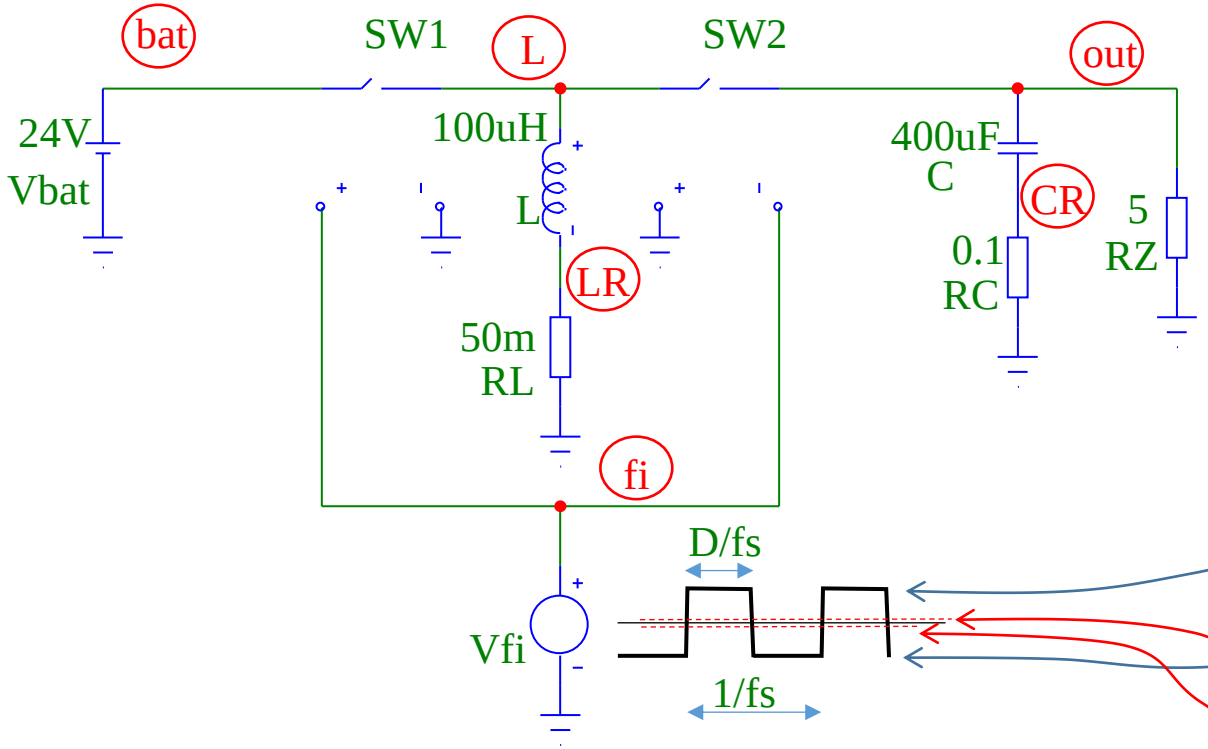


```
Buck-Boost converter
*
.param D=0.5 fs=10kHz
Vbat bat 0 24V
Sw1  bat L fi 0 spinac
Sw2  L out 0 fi spinac
L L LR 100uH
RL LR 0 50m
C out CR 400uF
RC CR 0 0.1
Rz out 0 5
*
Vfi fi 0 pulse
+ -1 1 10n 10n 10n {D/fs} {1/fs}
.model spinac VSWITCH
+ Ron=0.1 Roff=10meg Von=0.1 Voff=-0.1
*
.tran 0 5m 0 5u skipbp
.probe
.end
```

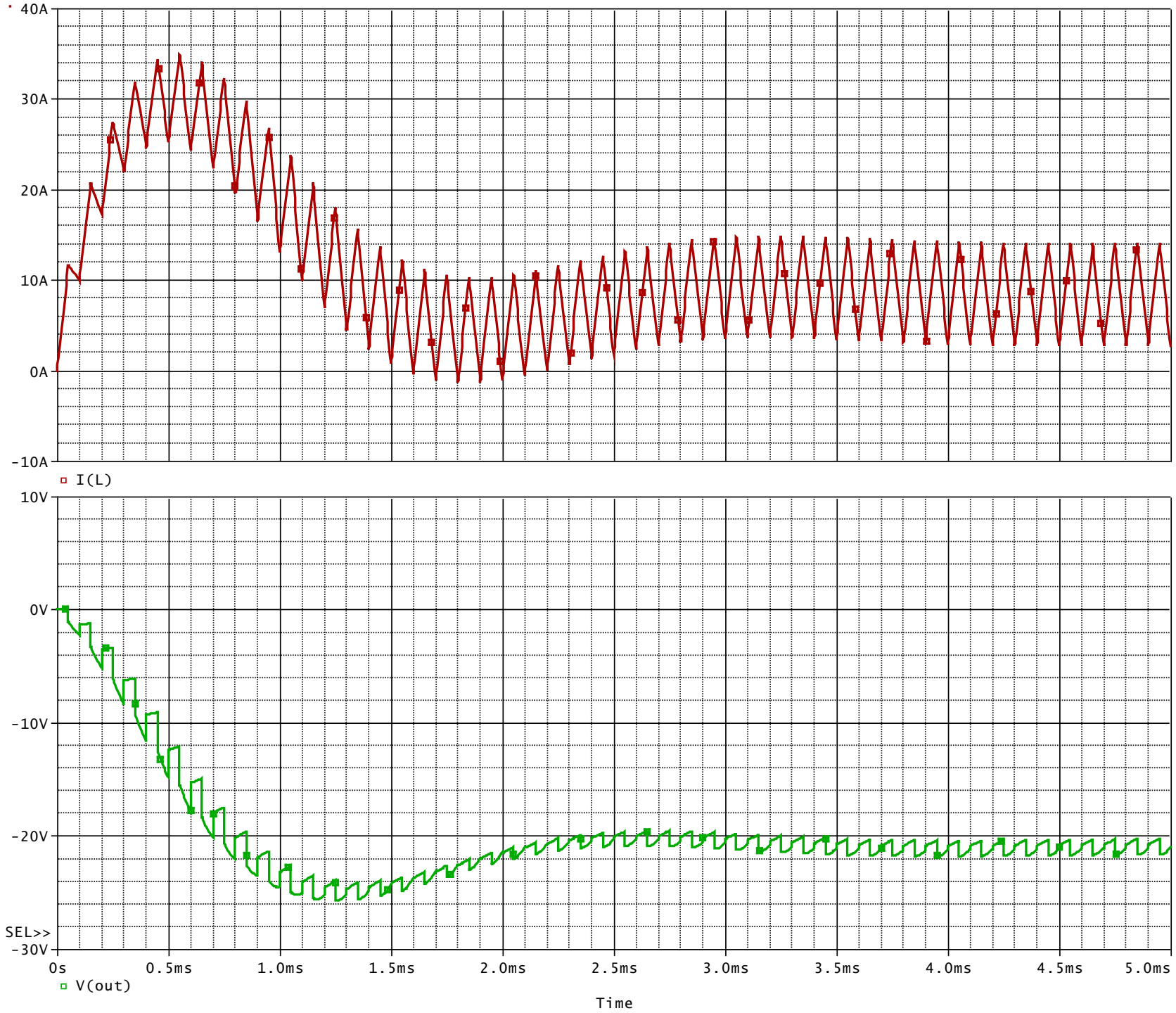
40A
30A
20A
10A
0A
-10A
I(L)
10V
0V
-10V
-20V
SEL>>
-30V
0s
0.5ms
1.0ms
1.5ms
2.0ms
2.5ms
3.0ms
3.5ms
4.0ms
4.5ms
5.0ms
V(out)
Time